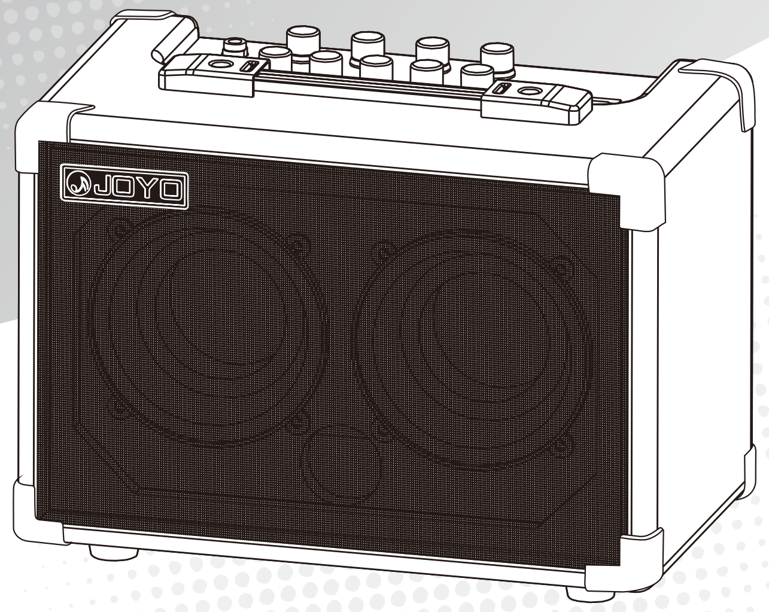

AC-40 原声吉他放大器

用户使用说明

深圳市卓乐科技有限公司
SHEN ZHEN JOYO TECHNOLOGY CO.,LTD

感谢购买我们的产品!

非常感谢您选择和购买JOYO AC-40原声吉他放大器。AC-40是在JOYO备受好评的AC-20型吉他音箱基础上，做针对性研发，使AC-40在保持高品质回放音质的同时，满足音乐人对户外演奏的需求，作为一款可户外使用的原声吉他音箱，它的声音必须足够响亮，并且轻便易携带。功率方面，我们将AC-40音乐功率设定在40W（RMS），这个功率可以很好的满足小型户外演出的需求。在电池续航方面，AC-40在电池满电的情况下，实测可连续播放音乐3小时，实际使用中，吉他信号不会像音乐信号那样对电池进行均衡持续的消耗，就是说，单纯演奏吉它，以及使用麦克风唱歌，AC-40的电池使用时间将会大于3小时。音乐回放品质方面，我们沿用AC-20的信号处理电路，保证您可以在AC-40上可以得到像AC-20一样完美的音色。

AC-40的主要特点为：
- ■放大特性曲线专门针对原声吉他而设计，高音亮丽饱满，中低频浑厚有力。
- ■音乐功率40W（20W+20W）。
- ■内置了一颗高性能的数字效果处理芯片，为您提供多达三种高品质DSP数字效果(CHORUS、DELAY、REVERB）。
- ■三种数字效果，您可以同时使用。
- ■支持麦克风输入，电路针对人声特点专门优化，人声回放清晰有力。
- ■麦克风通道独立混响效果。
- ■AC-40也如多数吉他音箱一样，配备了AUX IN接口，您可通过此接口来输入CD或MP3音乐伴奏信号，来跟着伴奏即兴演奏或练习。
- ■内置电池，满足户外演奏需求。
- ■长达3小时（视使用情况可能会高于此值）的电池续航时间，整场演出“不插电”。

注意事项 ▲

- ■请阅读这里的说明。
- ■请保存这些说明。
- ■请注意所有的警告说明。
- ■请按照说明操作。
- ■不要在靠近水的地方使用这一设备。
- ■请用干布清理本设备。
- ■不要在靠近热源的地方使用本设备，如加热器、暖气机、电热炉、功放器等各种易发热设备。
- ■不要损坏带有不同极性或接地功能的插头。有极性的插头带有两个大小不同的插片，有接地功能的插头有两个插针和接地插针，大的插针或第三个插针有接地功能，确保您的安全。如果随货供应的插头不能使用的话，请找电工更换老旧的的插座。
- ■电源线不要放在可能被踩到的地方，也要避免有尖角的地方，请特别保护插头，延长线和设备上的电源线。
- ■请在使用完毕后拔下电源插头，以节约能源。
- ■本设备一定要有接地保护。
- ■如果电源插头或电源连接板有切断电源功能的话，它们一定要处在随时都能被拿到的地方。
- ■请使用AC-40随机附带的AC电源适配器！使用其他适配器可能造成适配器电压与AC-40输入电压不兼容，导致损坏或其他意外情况发生。
- ■AC-40随机附带之适配器已通过相关电磁兼容及安规测试，使用其他适配器我司将不保证其安规性能可以达到或符合您所在国家或地区的强制安全认证标准。
- ■请只使用制造商规定的推车，架子，三角架，支架和桌子，也可用随货供应的器件。如果您使用推车来搬移设备的话，请注意安全放置设备，以便避免倒下而造成的伤害。
- ■有风暴雷雨时或长期不使用本设备的时候，请拔出电源插头。
- ■所有维修工作，都必须由有资格的维修人员进行。设备受到损坏时（如：电源线或电源插头被损坏，水或液体流入设备内，设备受到雨淋或受到潮气侵入，设备不能正常运作，设备摔在地上后），必须进行维修。
- ■注意！维修提示是给有资格的维修人员看的。为了避免触电的危险，请不要擅自进行维修。有资格的专业维修人员才能对设备进行维修。

面板描述

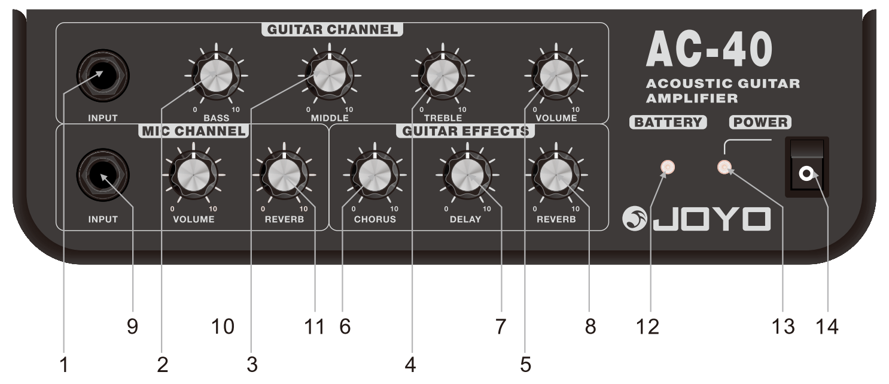
GUITAR CHANNEL
INPUT
BASS
MIDDLE
TREBLE
VOLUME
AC-40
ACOUSTIC GUITAR AMPLIFIER
BATTERY
POWER
MIC CHANNEL
GUITAR EFFECTS
INPUT
VOLUME
REVERB
CHORUS
DELAY
REVERB
JOYO
9
10
11
6
7
8
12
13
14
1
2
3
4
5

1.)吉他输入接口（INPUT）：6.35入接口。
2.)低频(BASS)
3.)中频(MIDDLE)
4.)高频(TREBLE)
5.)音量控制(VOLUME)
6.)合唱（CHORUS）：调节合唱效果深度。
7.)延时（DELAY）：调节延时时间长短。
8.)混响（REVERB）：调节吉他混响效果干湿比。
9.)话筒输入接口（INPUT）
10.)话筒音量控制(MIC/VOLUME)：调节话筒通道的音量大小。
11.)混响（REVERB）：调节话筒混响效果。
12.)充电指示灯
13.)电源指示灯
14.)电源开关（POWER）

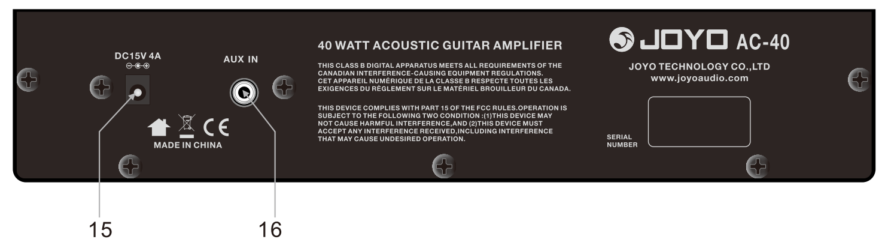
DC15V 4A
AUX IN
MADE IN CHINA
40 WATT ACOUSTIC GUITAR AMPLIFIER
THIS CLASS B DIGITAL APPARATUS MEETS ALL REQUIREMENTS OF THE CANADIAN INTERFERENCE-CAUSING EQUIPMENT REGULATIONS.
CET APPAREIL NUMÉRIQUE DE LA CLASSE B RESPECTE TOUTES LES EXIGENCES DU RÈGLEMENT SUR LE MATÉRIEL BROUILLEUR DU CANADA.
THIS DEVICE COMPLIES WITH PART 15 OF THE FCC RULES.OPERATION IS SUBJECT TO THE FOLLOWING TWO CONDITION :(1)THIS DEVICE MAY NOT CAUSE HARMFUL INTERFERENCE,AND (2)THIS DEVICE MUST ACCEPT ANY INTERFERENCE RECEIVED,INCLUDING INTERFERENCE THAT MAY CAUSE UNDESIRED OPERATION.
JOYO AC-40
JOYO TECHNOLOGY CO.,LTD
www.joyoaudio.com
SERIAL NUMBER
15
16

15.) DC电源输入接口：与15V/DC/4A内正外负的适配器连接。
16.) 外接伴奏输入接口(AUX/INPUT)：此为立体耳机输入接口（3.5），用接入外部音源，如CD，MP3。

电池充放电的使用与保养

本机开机状态下，当电源指示灯（POWER）由红色变成蓝色灯时候，就需要对电池进行充电了，这时请您关闭电源开关（NO/OFF），电源指示灯熄灭将配套电源线插入适配器，输出插口连接到（DC15/4A）位置上，把电源插头插入交流排座上，这时充电指示灯点亮(BATTERY) 黄色，表示正在充电中，充满电后充电指示灯熄灭。充电期间请不要断开电源，否则会影响电池的使用寿命。在充电期间使用设备时，请打开电源开关后设备可以正常使用，在使用设备时不影响您充电。

1. 如果设备长期闲置不用，应确保电池处于充满状态，每隔两个月复充一次电，否则电池将老化。
2. 请勿将设备倒置，否则电池液容易流出，损坏电池。
3. 电池电量不足时，电源指示灯（POWER）由红色变成了蓝色灯，请您应及时充电，否则电池将会老化。
4. 如果电池已经充满，但电池使用时间不足1小时，说明电池已经老化，需要更换新电池。

电气参数

- ●AC适配器输入电压：AC100-240V 50-60Hz
- ●AC适配器输出电压：DC15V/4A
- ●直流电压：12V/7.0Ah(铅酸电池)
- ●吉他通道输入灵敏度：-11.5dBV
- ●麦克风通道输入灵敏度：-41dBV
- ●AUX IN输入灵敏度：-11.5dBV
- ●RMS功率：40W（20W+20W）
- ●效果器-吉他通道：CHORUS、DELAY(最大500ms)、REVERB
- ●效果器-麦克风通道：REVERB
- ●体积:40*21*26.5cm
- ●重量:8.35kg

卓乐产品服务政策

一、在正常使用产品过程中，如果产品出现非人为损坏的性能故障，自购买之日起，消费者享有保修服务，保修期为12个月。
二、有下列情况之一者，消费者不能享受保修权益。
1、人为损坏；2、超过保修期；3、无保修卡及有效发票，但能够证明产品在保修期内的除外；4、保修卡与产品型号不符，或保修卡被涂改；5、未按说明书要求使用、维护、保养而造成产品损坏；6、未经卓乐公司授权，擅自拆卸、维修产品、或浸水、摔坏产品；7、其他不可抗力造成的损坏。
三、卓乐服务信息
消费者服务热线：0755-29765390
更多信息请访问： www.joyochina.cn

卓乐产品保修卡

产品型号		SN号码	
用户信息	姓名	购机日期	
	电话		
	地址		
	发票号码		
销售单位信息	名称（加盖公章）		
	地址		
	电话		

品牌:JOYO　　名称: 木吉他音箱
执行标准 :QB/T 4325-2012
制造商: 深圳市卓乐科技有限公司
地址: 广东省深圳市宝安28区新安三路陆氏工业大厦2楼　邮编:518133
售后服务热线 ：0755-29765390

产品合格证

检验结论 合格
检验员号 QC 01
日　　期

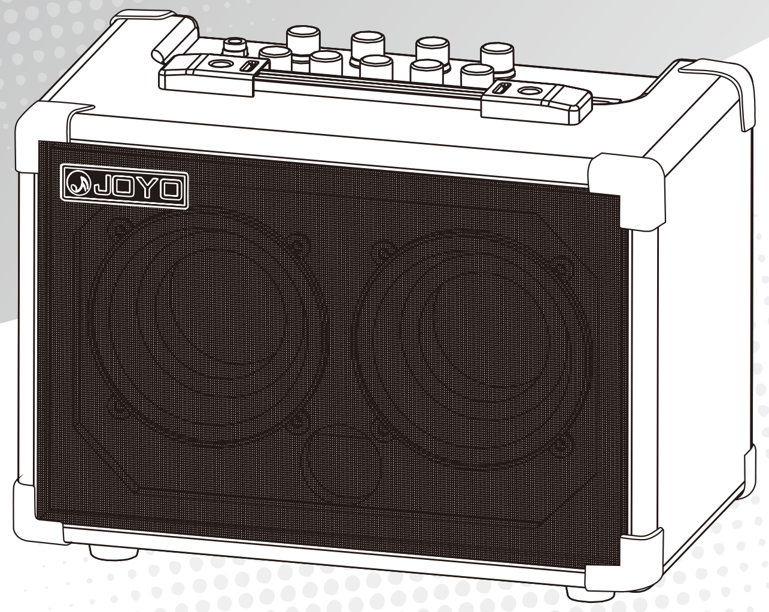

AC-40
Acoustic guitar amplifier
User Manual

JOYO TECHNOLOGY CO.,LTD

INTRODUCTION

Thanks for purchasing our AC-40. In order to use this product more safely and get the full use of its features, please read this User Manual carefully and keep it for future reference.
The AC-40 acoustic amplifier is developed on the basis of the popular AC-20. While retaining the high sound quality, it is more powerful, more portable and therefore a great choice for outdoor performances. Its 40W (RMS) power can easily meet the requirements for small live shows, and can be used as long as 3 hours continuously when fully charged. Based on the AC20's DSP circuit, it delivers the same sonic clarity and will satisfy your amplifier demands without a doubt.

Main Features:
- ■ An amplification characteristic and EQ curve specifically designed for acoustic guitars.
- ■ 40 W of power (20W+20W).
- ■ Built-in high-performance DSP chip to provide 3 DSP effects (CHORUS,DELAY,REVERB).
- ■ 3 DSP effects can be used simultaneously.
- ■ A dynamic microphone channel gives you a clear and powerful vocal sound.
- ■ Mic channel features a reverb.
- ■ AUX IN to connect CD player, MP3 or devices alike.
- ■ Built-in rechargeable battery to support outdoor performances.
- ■ As long as 3 hours of usage when fully charged.

IMPORTANT NOTES ▲

- ■Read these instructions.
- ■Keep these instructions.
- ■Heed all warnings.
- ■Follow all instructions.
- ■Do not use this device near water.
- ■Clean only with a dry cloth.
- ■Do not install near any heat sources such as radiators, heat registers, stoves, or other devices (including amplifiers) that produce heat.
- ■Do not defeat the safety purpose of the polarized or grounding-type plug. A polarized plug has two blades with one wider than the other. A grounding type plug has two blades and a third grounding prong. The wide blade or the third prong is provided for your safety. When the provided plug does not fit into your outlet, consult an electrician for replacement of the obsolete outlet.
- ■Protect the power cord from being walked on or pinched particularly at plugs, convenience receptacles, and the point where they exit from the device.
- ■Please unplug this device after use for energy conservation.
- ■Use the included AC power adapter only. Other adapters may not be compatible with the AC-40's input voltage and might cause damage or accidents.
- ■The included adapter has passed the electromagnetic compatibility and safety test. We don't guarantee the safety performance when used with third party adapters.
- ■Never use with a cart, stand, tripod, bracket, or table except as specified by the manufacturer, or sold with the device. When a cart is used, use caution when moving the cart/apparatus combination to avoid injury from tip-over.
- ■Unplug this device during lightning storms or when it’s not in use for a long period of time.
- ■Refer all servicing to qualified service personnel. Servicing is required when the device has been damaged in any way, such as power-supply cord or plug is damaged, liquid has been spilled or objects have fallen into the device, the device has been exposed to rain or moisture, does not operate normally, or has been dropped.

FRONT PANEL

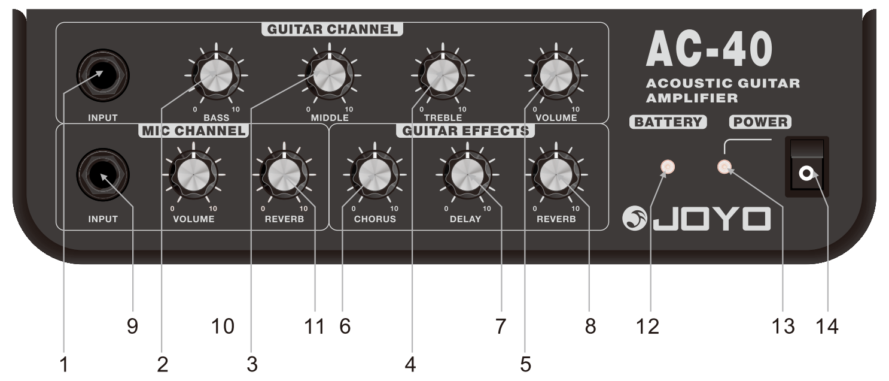
GUITAR CHANNEL
INPUT
BASS
MIDDLE
TREBLE
VOLUME
AC-40
ACOUSTIC GUITAR AMPLIFIER
BATTERY
POWER
MIC CHANNEL
GUITAR EFFECTS
INPUT
VOLUME
REVERB
CHORUS
DELAY
REVERB
JOYO
9
10
11
6
7
8
12
13
14
1
2
3
4
5

1. Guitar Input
2. BASS
3. MIDDLE
4. TREBLE
5. VOLUME
6. CHORUS: Adjust the depth of chorus effect
7. DELAY: Adjust the delay time
8. REVERB: Adjust the ratio of wet signal
9. MIC INPUT
10. MIC/VOLUME: Volume control for microphone channel
11. REVERB: Reverb control for microphone channel
12. Power Indicator
13. Mains Power
14. Power switch

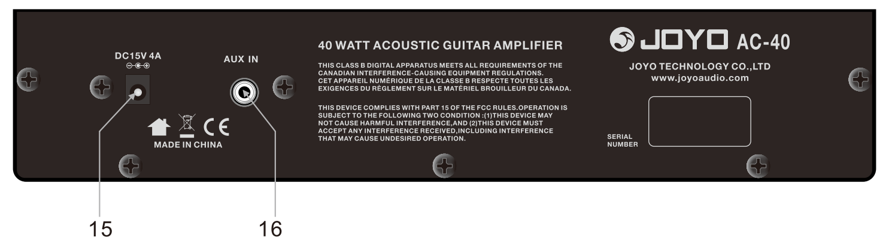
DC15V 4A
AUX IN
MADE IN CHINA
40 WATT ACOUSTIC GUITAR AMPLIFIER
THIS CLASS B DIGITAL APPARATUS MEETS ALL REQUIREMENTS OF THE CANADIAN INTERFERENCE-CAUSING EQUIPMENT REGULATIONS.
CET APPAREIL NUMÉRIQUE DE LA CLASSE B RESPECTE TOUTES LES EXIGENCES DU RÈGLEMENT SUR LE MATÉRIEL BROUILLEUR DU CANADA.
THIS DEVICE COMPLIES WITH PART 15 OF THE FCC RULES.OPERATION IS SUBJECT TO THE FOLLOWING TWO CONDITION :(1)THIS DEVICE MAY NOT CAUSE HARMFUL INTERFERENCE,AND (2)THIS DEVICE MUST ACCEPT ANY INTERFERENCE RECEIVED,INCLUDING INTERFERENCE THAT MAY CAUSE UNDESIRED OPERATION.
JOYO AC-40
JOYO TECHNOLOGY CO.,LTD
www.joyoaudio.com
SERIAL NUMBER
15
16

15.DC Mains Input: Connect the included adapter (15V/DC/4A Center Positive)
16.AUX/INPUT: Stereo headphone input (3.5) to connect a CD player, MP3 or devices alike.

BATTERY MAINTENANCE

When the power LED becomes blue, it indicates that the battery needs to be charged. Please turn off the amp, connect the cable with adapter and plug into DC15/4A port. The indicator lights Yellow in charging and turns off automatically when it is fully charged. Note: Please do not disconnect the power when it is charging, otherwise it will damage the battery.
1.If your amplifier is unoccupied for a long period of time, the battery should be charged every two months to avoid battery aging.
2.Don't put this device upside down. Otherwise the liquid is apt to leak and damage the battery.
3.When the indicator becomes BLUE, please charge it timely to preserve battery life.
4.If the amp can only work for less than 1 hour after fully charged (with normal use and maintenance), it’s time to replace the battery.

PARAMETERS

AC adapter input voltage: AC100-240V 50-60Hz
AC adapter output voltage: DC15V/4A
DC Voltage: 12V/7.0Ah (Lead-acid battery)
Guitar input sensitivity: -11.5dBV
Microphone input sensitivity: -41dBV
AUX IN sensitivity: -11.5dBV
RMS: 40W（20W+20W）
Pedal-Guitar channel: Chorus, Delay (the maximum is 500ms), REVERB
Pedal-MIC channel: REVERB
Dimensions:40*21*26.5cm
Weight:8.35kg

JOYO TECHNOLOGY CO., LTD
Address: 2/F, Lushi Industry Building, 28th District, Bao'an, Shenzhen, 518133 China.
www.joyoaudio.com　Email:info@joyoaudio.com　Tel: 0086-755-29765381